JANUS 3
CIRCULATOR WATER HEATER
INSTALLATION, COMMISSIONING & SERVICING INSTRUCTIONS
G.C. No 53 416 06

Publication No. ZZ 180/17
May 2000

These appliances are tested and certified by B G Technology for use with natural gas.

IMPORTANT: These instructions are to be read in conjunction with the relevant air heater Installation, Commissioning and Servicing Instructions.

1. GENERAL DESCRIPTION

1.1 JANUS 3 is an open flued gas fired circulator which can generate up to 62.5 litres per hour (13.7 gal/h) of hot water when installed in a Johnson & Starley air heater. They are suitable for use in gravity fed circuits comprising an INDIRECT cylinder. If the intention is to use a JANUS 3 with a DIRECT cylinder, then the local Water Authority should first be consulted.

1.2 The gas supply to the main burner is controlled by a Multifunctional Control. The main burner operates in conjunction with a permanent pilot burner and a thermoelectric sensing device. Pilot ignition is by means of a Piezo unit.

2. TECHNICAL DATA

2.1

	NATURAL GAS.	PROPANE GAS.
Injector:	1.67 mm Diameter	Bray Cat. 960/140 1.02 mm Diameter
Setting pressure:	14 mbar (5.6 in wg).	37 mbar (14.8 in wg).
Gas rate:	0.42m^3/h (14.85ft^3/h).	0.17m^3/h (6.0ft^3/h).
Input:	4.4kW (15,000Btu/h).	4.4kW (15,000Btu/h).
Output:	3.32kW (11,340Btu/h).	3.22kW (11,000Btu/h).

2.2 **WATER.**

Maximum output: 62.5 litres/h (13.7 gal/h) with 44.5°C (80°F) rise.

Maximum water temperature: 77°C (170°F).

User temperature control allows settings below maximum.

Maximum working head: 20m (65ft).

Minimum circulation head: 610mm (24in) with indirect cylinder, 356mm (14in) with direct cylinder.

Water connections: Rp $^3/_4$ ($^3/_4$" BSP internal parallel).

3. GENERAL REQUIREMENTS

3.1 **RELATED DOCUMENTS (refer to current issues).**
This appliance MUST BE installed in accordance with the relevant requirements of the Gas Safety (Installation and Use) Regulations, local Building Regulations, the I.E.E. Regulations and the Bye-laws of the local Water Company. It should also be in accordance with any relevant requirements of the local Gas Region and Local Authority, and the relevant recommendations of the following British Standard Codes of Practice:

BS 6798:	Specification for installation of gas fired hot water boilers of rated input not exceeding 60kW.
BS 5546:	Installation of gas hot water supplies for domestic purposes (2nd family gasses).
BS 5440 Pt. 1:	Flues.
BS 5440 Pt. 2:	Air supply.
BS 6891:	Installation of low pressure gas pipe work up to 28mm (R1) in domestic premises.
BS 6700:	Design, Installation, testing and maintenance of services supplying water for domestic use within buildings and their curtilages.

3.2 **GAS SUPPLY.** Installation of pipework is to be in accordance with BS 6891. Pipework from the gas meter is to be of adequate size, and pipes of a smaller diameter than the appliance are not to be used. The complete installation must be tested for gas soundness, and purged as detailed in BS 6891.

3.3 **WATER CIRCULATION SYSTEM.** Detailed recommendations for the water circulation system are given in BS 6798, BS 5449 (for small bore and microbore central heating systems), and BS 5446.

3.3.1 To ensure good circulation in gravity circuits, flow pipes should be designed to run vertically from the water heater before running laterally. Any lateral run should be less than 2 x the previous vertical run. Pipework should be installed with a rise towards the vent point.
Note: For easy removal of the circulator, use compression fittings.

3.3.2 Drain cocks must be located in accessible positions, which permit the draining of the whole system, including the appliance and hot water storage vessel. A drain cock should be fitted at the lowest point of the water heating circuit and, in the case of an indirect system, another must be fitted at the lowest point of the cold feed. Drain cocks should be at least $^1/_2$ in nominal size, and be in accordance with BS2879.

3.3.3 Economy valves can only be used in a DIRECT installation.

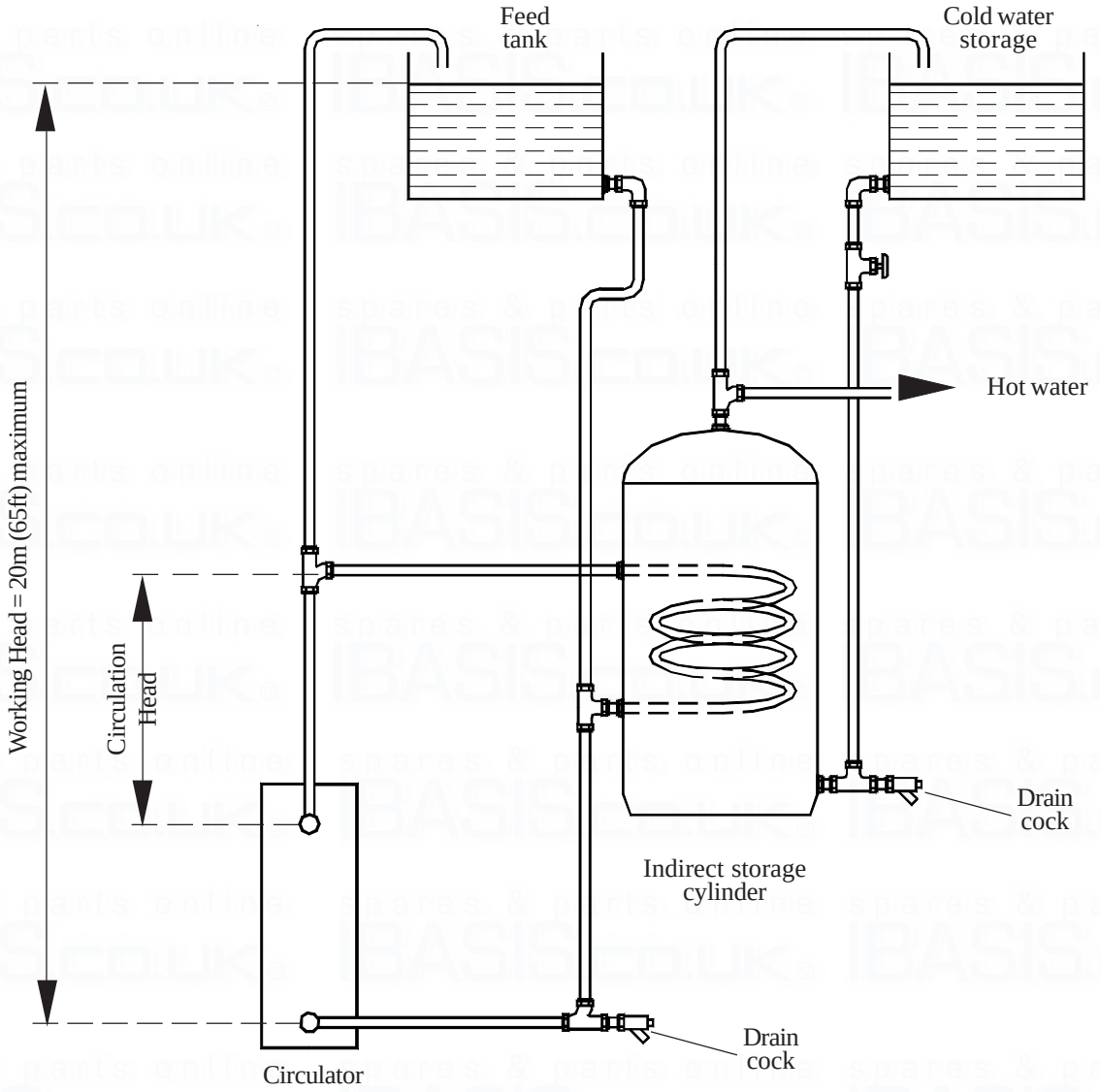

Fig. 1a.
Typical JANUS 3 Indirect System application.

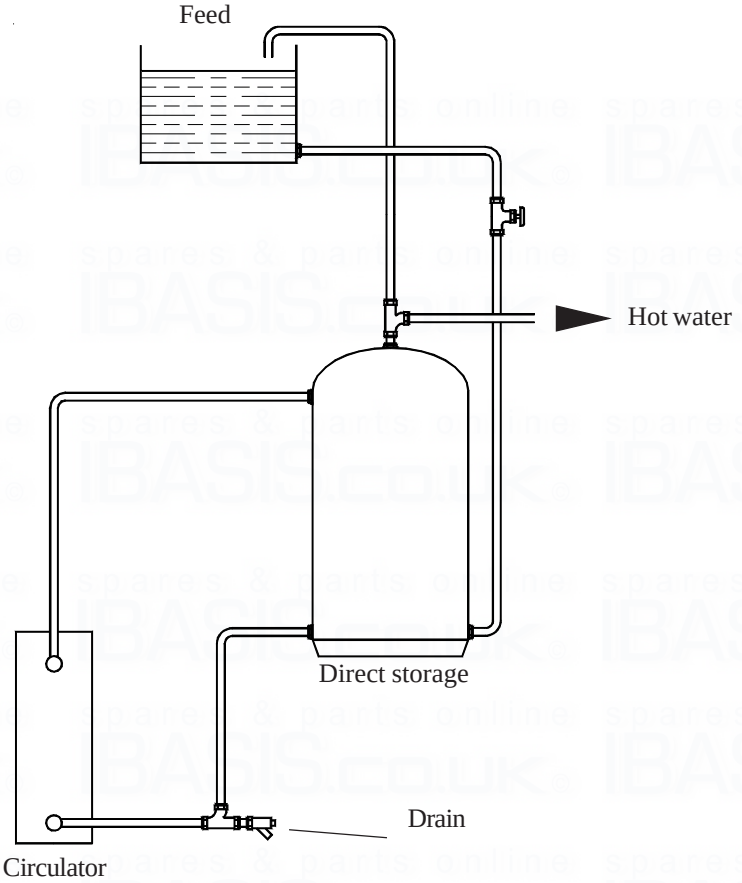

Fig. 1b
Typical JANUS 3 Direct System application.

4. INSTALLATION

4.1 WATER CONNECTIONS.

4.1.1 Connect 22 mm flow and return pipes (Rp $^3/_4$, $^3/_4$ in BSP) as required, in accordance with the guidelines detailed in Sect 3.3. To facilitate subsequent dismantling of the heat exchanger, use union fittings at the point of connection to the appliance. Ensure that return pipe work does not restrict access to the thermostat phial or the top panel.

4.1.2 **For side exit:** Use the knockouts in the cabinet sides for external pipe routing.

4.1.3 **JT 19-25 Series air heaters with return connection from left hand side:** Route the pipe behind the gas feed pipe to allow main burner removal.

4.1.4 **For top exit (J15-22, J25-32, JA33-43, JB40-55):**

a. Remove the white plastic plugs in the top panel and fan compartment floor of the air heater, and feed the flow and return pipes through the holes from below. Ensure the straight ends are fed through first, with the return pipe to the rear.

b. Firmly tighten the connections at the circulator before completing the connections at the top of the flow and return pipes.
Note: Fittings on the main body must be well supported when making these connections.

c. Using good quality ducting tape, seal where the pipes pass through the fan compartment floor and the top panel of the air heater.

5. COMMISSIONING

5.1 Fill the water circulation system, clear any air locks and check for water soundness.

5.2 Ensure that the Thermostat capillary is fully inserted into the pocket in the flow connection of the circulator.

5.3 JANUS 3 is factory set to provide a flow temperature of 60°C (140°F). If a higher flow temperature is required, proceed as follows:

5.3.1 Remove the Multifunctional Control Temperature Control knob, (this is a push fit only)

5.3.2 Referring to Figs. 2, identify the stop screws 1 and 2.

5.3.3 Dependant upon the required water temperature, remove:

a. Stop screw 1 to provide a maximum temperature of 68°C (155°F), or,

b. Stop screws 1 and 2 to provide a maximum temperature of 77°C (170°F).

5.3.4 Refit the Multifunctional Control Temperature Control knob, ensuring that it fully engages on the valve spindle.

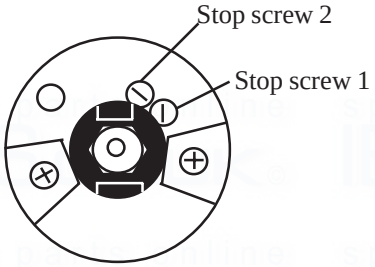

Fig. 2a
Stop screw positions

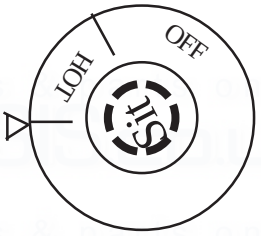

Fig. 2b
Minimum Setting 60ºC

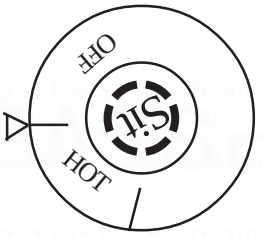

Fig. 2c
Maximum Setting 77ºC

Fig. 2
Water Temperature Control Settings

5.4 **GAS PRESSURE SETTING:**

5.4.1 Referring to fig. 3, remove the Outlet Pressure Test Point cover and connect the Gas Pressure Test Gauge.

5.4.2 Turn the gas supply ON at the gas service cock.

5.4.3 Referring to the lighting instruction label, ignite the Pilot Burner and ensure that the pilot flame envelopes the thermocouple tip.

5.4.4 Set the Multifunctional Control Temperature Control knob fully clockwise and ensure that the main burner ignites. The appliance will now operate under thermostatic control.

5.4.5 Test the appliance for gas soundness, sealing any leaks found.

5.4.6 Referring to Fig. 3 and para 2.1, set Multifunctional Control Pressure Adjuster to provide the required pressure setting for the installation.

5.5 **SYSTEM OPERATION:**

5.5.1 With the appliance ignited, ensure that all controls operate correctly.

5.5.2 Carry out a spillage test as detailed in the Installation, Commissioning and Servicing instructions for the relevant air heater

5.5.3 Allow the system to reach working temperature and switch the appliance OFF, rapidly drain and refill the system, clearing any air locks and test for water soundness.

5.5.4 Turn OFF the Gas supply cock.

5.5.5 At the Multifunctional Control, remove the Gas Pressure Test Gauge and refit the Inlet Pressure cover.

5.5.6 Fit the Control Cover.

5.5.7 Turn the Gas supply cock ON.

5.5.8 Relight the appliance and set the appliance to the User's requirements.

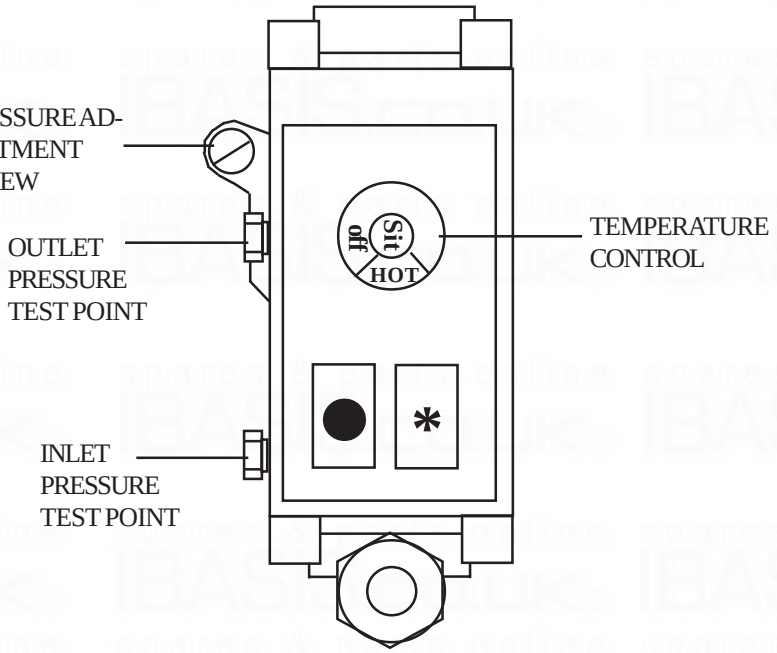

Fig. 3
Multifunctional control Component Identification

6. INSTRUCTIONS FOR USER

6.1 If the building is unoccupied, ensure that the User Instructions (including those for the air heater) are left with the appliance for the user. Leave THESE Installation Instructions with the appliance for use on future service calls.

6.2 If the building is occupied, hand the User Instructions to the occupier and ensure that the user is instructed on the following:

6.2.1 How to use the circulator independently from the air heater.

6.2.2 How to light the appliance.

6.2.3 How to adjust the water temperature.

6.2.4 That the appliance must be serviced at least once a year by a competent person, to ensure efficient and safe operation.

6.2.5 The instructions for safe use have been read and understood.

6.2.6 That if persistent failure of the pilot burner occurs, expert help must be obtained.

6.2.7 What actions to take in an emergency shutdown.

6.2.8 What actions to take if there is an escape of gas, i.e. turn off the gas supply at the gas meter, extinguish any naked flame, ventilate the area, **DO NOT** operate any **electrical switches**, call the emergency service of the local gas authority.

7. MAINTENANCE

IMPORTANT: Ensure that the gas and electricity supplies are isolated before commencing any maintenance or replacement of components. After completion of any maintenance, always test for gas soundness and carry out a complete functional test of the appliance in accordance with Commissioning Instructions at Sect 5.1 to 5.4 inclusive.

7.1 **ROUTINE MAINTENANCE:**

7.1.1 Operate the appliance and check for the correct function of the burner and controls.

7.1.2 Remove and inspect the Burner and Control Assembly, cleaning the main burner, pilot burner and injectors as required.

7.1.3 Inspect the Thermocouple and ignition lead for signs of damage, cleaning or replacing as required.

7.1.4 Inspect the Heat Exchanger flueways, clean by brushing from above and below and taking care to avoid damaging the surrounding insulation. Remove debris from the Heat Exchanger and Burner aperture using a vacuum cleaner or air duster. Clean any debris from the heat shield at the base of the appliance.

7.1.5 Ignite the appliance and test for gas soundness.

7.1.6 Re-commission the appliance in accordance with section 5 of these instructions.

7.1.7 Ensure that the appliance and controls are operating correctly.

7.1.8 Carry out a spillage test to ensure flue products are clearing satisfactorily.

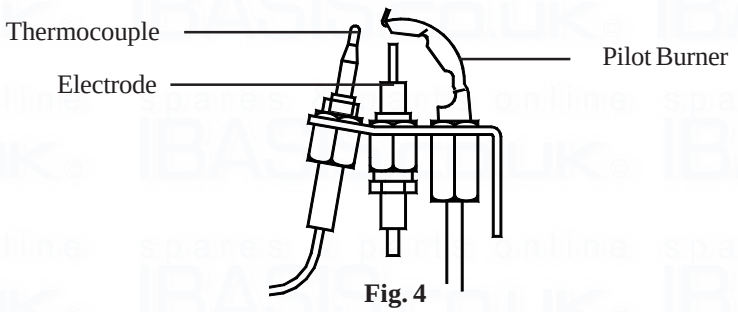

Fig. 4
Pilot burner assembly

7.2 **BURNER AND CONTROLS ASSEMBLY REMOVAL:**

7.2.1 Ensure that the gas supply is turned OFF at the supply cock, and the electrical supply is isolated.

7.2.2 Remove the lower front door of the air heater.

7.2.3 Disconnect the ignition lead from the Piezo unit.

7.2.4 Withdraw the retaining plug from the thermostat pocket and remove the thermostat phial, taking care to avoid damage to the thermostat.

7.2.5 Disconnect the gas feed pipe from the appliance.

7.2.6 Release the Burner Mounting Screw and withdraw the burner and control assembly.

7.2.7 Refitment or replacement is in reverse order, ensuring that:

a. The lug on rear of main burner engages into the bracket at the rear of the appliance body.
b. When refitting thermostat phial care is taken to avoid damaging the phial.
c. The solenoid coil is refitted with the electrical lead uppermost and away from the burner.
d. The thermostat capillary and retaining clip are secured using the Burner Mounting Screw.

7.3 PILOT BURNER, THERMOCOUPLE AND ELECTRODE, REMOVAL AND REPLACEMENT:

Note: The relationship between the pilot and thermocouple is critical and must not be disturbed. Do not attempt to dismantle the pilot assembly. If any part of the pilot assembly is considered defective, the complete assembly must be replaced.

7.3.1 Remove the Burner and Controls Assembly as detailed in para 7.2

7.3.2 Disconnect Igniter lead from Piezo unit.

7.3.3 Disconnect the Thermocouple from the Multifunctional Control, taking care to avoid causing damage to the thermocouple capillary.

7.3.4 Release the Pilot Feed Pipe from the Multifunctional Control.

7.3.5 Remove the 2 x 4mm screws securing the Pilot Burner Assembly to the Burner and Control Assembly, and withdraw the Pilot Burner Assembly.

7.3.6 Release the Thermocouple securing nut from the Pilot Burner Assembly and withdraw the Thermocouple, taking care to avoid causing damage to the Thermocouple capillary.

7.3.7 Release the Electrode securing nut from the Pilot Burner Assembly and withdraw the Electrode.

7.3.8 Release the Pilot Feed Pipe securing nut from the Pilot Burner Assembly and withdraw the Pilot Feed Pipe and Pilot Injector from the Pilot Burner Assembly, and disconnect the Pilot Injector from the Pilot Feed Pipe hook.

7.3.9 Refitment or replacement is in reverse order, ensuring that the thermocouple connection at the Multifunctional Control is not overtightened (finger tight + ¼ turn only), and the relationship between the pilot assembly and the Main burner is as shown in Fig. 5.

7.4 MAIN BURNER AND MAIN INJECTOR REMOVAL:

7.4.1 Remove the Burner and Controls Assembly as detailed in para 7.2

7.4.2 Remove the Pilot Assembly as detailed in para 7.3

7.4.3 Release the main burner lock nut, and unscrew the main burner from the injector housing.

7.4.4 Unscrew the main injector from injector housing.

7.4.5 Refitment or replacement is in reverse order, ensuring that the main burner is screwed in as close as possible to the injector shoulder, and the relationship between the pilot assembly and the Main burner is as shown in fig. 5.
NOTE: If the burner is not vertically aligned, the burner and control assembly will not fit into the water body for re-assembly.

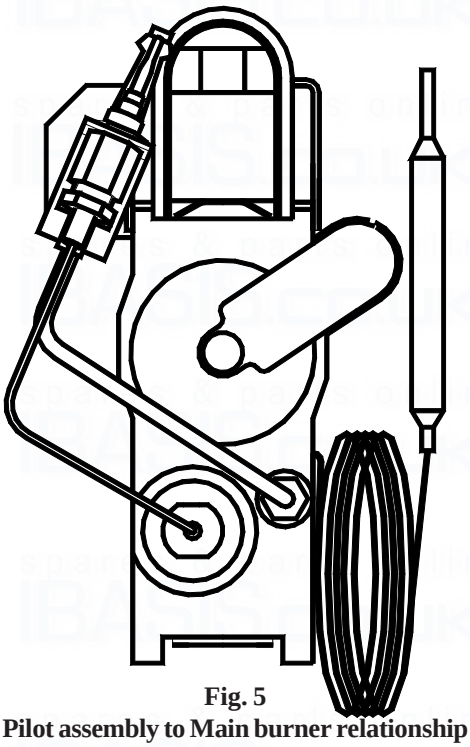

Fig. 5
Pilot assembly to Main burner relationship

7.5 HEAT EXCHANGER ASSEMBLY INSPECTION & ACCESS:

7.5.1 Remove the Burner and Controls Assembly as detailed in para 7.2

7.5.2 **J15-22, J25-32 and JA33-43 Air Heaters only:** Release the downdraught deflector plate securing screw from the air heater bulkhead, and withdraw the deflector plate from the heater cabinet circulator compartment.

7.5.3 Release the circulator top panel securing screw and withdraw the circulator top panel.

7.6 **MULTIFUNCTIONAL CONTROL REMOVAL:**

7.6.1 Remove the Burner and Controls Assembly as detailed in para 7.2

7.6.2 Remove the Pilot assembly as detailed in para 7.3.

7.6.3 Disconnect the Pilot Feed Pipe and thermocouple capillary from the Multifunctional Control.

7.6.4 Refitment or replacement is in reverse order, ensuring replacement 'O' ring seal, and transfer of the data badge in the event of replacement.

7.7 **CIRCULATOR BODY REMOVAL:**

7.7.1 Gain access to the Heat Exchanger as detailed in para 7.5

7.7.2 Drain down the water system and disconnect the flow and return connections from the circulator.

7.7.3 Release the 2 x screws securing the circulator to the air heater bulkhead and withdraw the circulator body from the air heater cabinet.

7.7.4 Remove the flue hood fixing screw and disengage the flue hood from the circulator body.

7.7.5 Refitment or replacement is in reverse order, ensuring that any replacement body is clearly marked JANUS 3.

IMPORTANT:

a. JT19-25 series air heaters only: Ensure that the flue hood spigot and body extension pass through their respective holes in the rear panel of the air heater.

b. All other air heaters: Ensure that the flue hood spigot locates positively in the mouth of the flue pipe at the rear of the air heater.

c. Fittings on the main body must be well supported when remaking water connections.

8. DEFECT DIAGNOSIS

IMPORTANT: When purging or checking gas supplies ensure that, there is adequate ventilation to the room or cupboard, and all naked lights are extinguished.

	SYMPTOM		POSSIBLE CAUSE	RECTIFICATION
a.	Pilot fails to light.	i	No gas supply to water heater.	Check for gas at inlet pressure test point on Multifunctional Control.
		ii	Gas supply not purged.	Purge gas supply pipe in accordance with BS 6891.
		iii	Pilot injector orifice restricted.	Clean pilot orifice or replace pilot assembly.
		iv	Piezo faulty.	Check/replace piezo unit, lead or pilot burner assembly.
b.	Pilot fails to remain lit.	i	Connection between thermo-couple and Multifunctional Control not secure.	Check connection is secure.
		ii	Faulty Multifunctional Control.	Replace Multifunctional Control.
		iii	Thermocouple defective.	Replace Pilot Burner Assembly.
c.	Pilot burners repeatedly extinguishes after normal operation.	i	Pilot injector orifice restricted.	Clean pilot orifice or replace Pilot Assembly.
		ii	Thermocouple defective.	Replace Pilot Burner Assembly.
		iii	Draughts affecting pilot flame.	Eliminate draughts.
		iv.	Combustion air contaminated.	Conduct spillage test and rectify.
d.	Main burner fails to light.	i	Thermostat too hot.	Draw off hot water from system to allow thermostat to cool, and ensure burner lights.
		ii	Thermostat defective.	Replace Thermostat.
		iii	Multifunctional Control defective.	Replace Multifunctional Control.
e.	Insufficient hot water.	i.	Burner operation cycle too short due to incorrect plumbing.	Check plumbing, in particular lateral runs.
f.	Water temperature outside usable range.	i.	Thermostat out of calibration.	Set thermostat for required water temperature or replace Multifunctional Control.
		ii.	Gas rate incorrect.	Check burner pressure, main injector for blockage, replace main injector if faulty.
		iii	Thermostat phial or capillary damaged.	Replace Multifunctional ontrol.

IMPORTANT: If a faulty heater control may have resulted in excessively high water temperatures, (above 85ºC, 185ºF), the hot water cylinder should be checked to establish whether it is a SELF-PRIMING type. If so, the circuit should be drained and refilled to ensure that the air seal between the primary and secondary circuits in the cylinder is properly established.

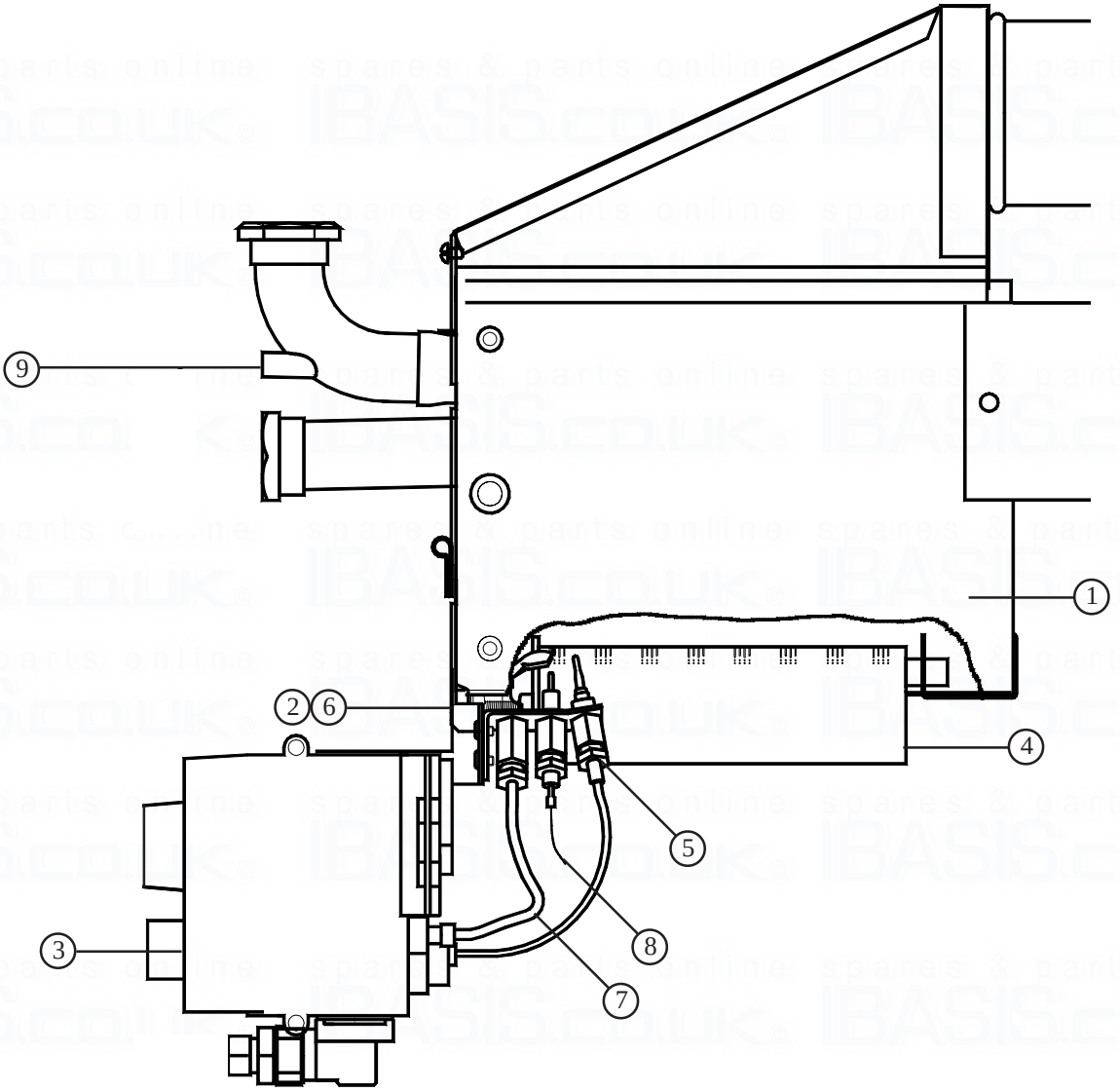

10. **SHORT LIST OF SPARES**

Key	G.C. No	J&S Part No	Description	Qty	
1	242-279	S00102	Main Body Assembly	1	
2	230-459	JAN3/062BN	Burner and Controls Assembly (Natural gas)	1	or
		JAN3/062BP	Burner and Controls Assembly (Propane gas)	1	
3	392-677	BOS 01104	Multifunctional Control Mini SIT	1	
4	384-615	BOS 00562	Burner Arm	1	
5	244-880	BOS 02397/1	Pilot Burner Assembly (Natural gas)	1	or
		BOS 02397/2	Pilot Burner Assembly (Propane gas)	1	
6		BOS 01646N	Main Injector (Natural gas)	1	or
		1000-0701480	Main Injector (Propane gas)	1	
7	245-497	S00796	Pilot Feed Kit	1	
8	397-819	BOS 02394	Igniter electrode lead	1	
9	230-328	1000-2500070	Thermostat phial retaining plug	1	

Johnson and Starley prides itself on its ability to supply spare parts quickly and efficiently. If your service engineer indicates a problem in obtaining a spare part, advise him to contact Johnson and Starley Spares Department at the address below.

Telephone: 01604 762881

Fax : 01604 767408

JOHNSON AND STARLEY Ltd.,
Rhosili Road,
Brackmills,
Northampton NN4 7LZ